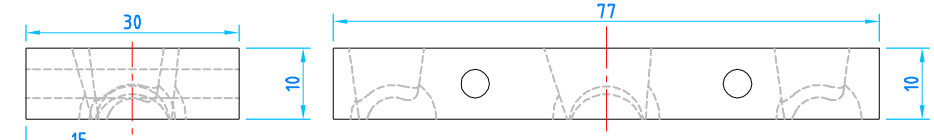

Part Name- Ankle Top Cover Qty.- 1 no.
Material - High tensile alloy steel (EN24) Tol. - 0.01 mm

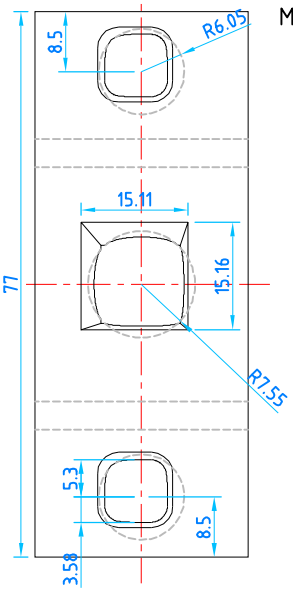

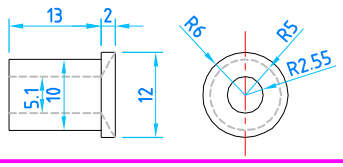

Part Name- Ankle Pin
Qty.- 2 nos.
Material - High tensile alloy steel (EN24)
Tol. - 0.01 mm

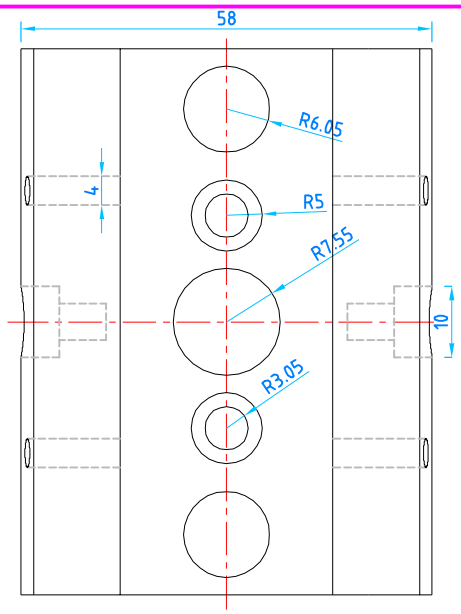

Part Name- Ankle Base Qty.- 1 no.
Material - High tensile alloy steel (EN24) Tol. - 0.01 mm

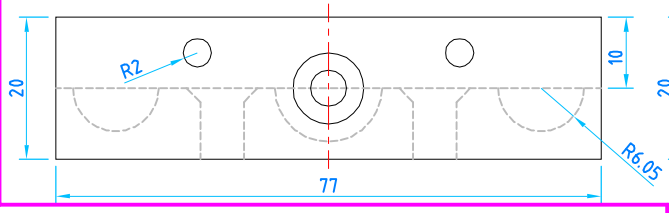

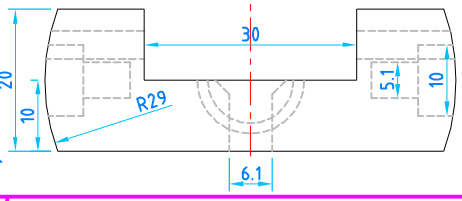

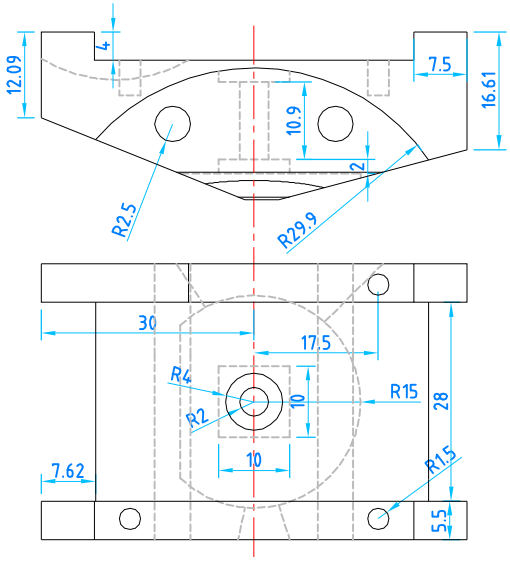

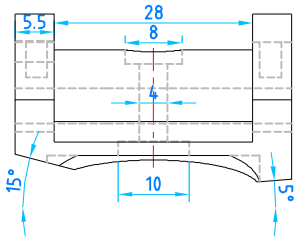

Part Name - Adapter Qty.- 1 no.
Material - High tensile alloy steel (EN24)
Tol. - 0.01 mm

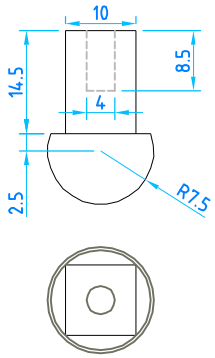

Part Name - Ball connector
Material - High tensile alloy steel (EN24)
Qty.- 1 no. Tol. - 0.01 mm

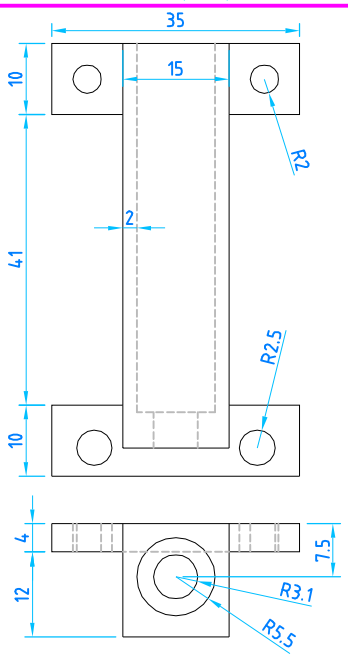

Part Name - Side Cylinder Qty.- 2 nos.
Material - High tensile alloy steel (EN24) Tol. - 0.01 mm

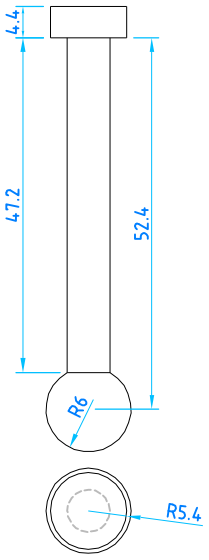

Part Name - Piston link
Qty.- 2 nos.
Material - Brass
Tol. - 0.01 mm

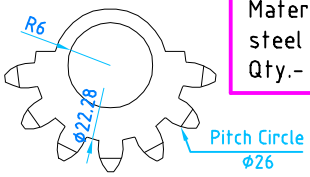

Part Name - Sector gear 2
Qty.- 2 nos.
Material - AISI 4140 annealed steel / AISI 1137 hot-rolled steel
Tol. - 0.01 mm

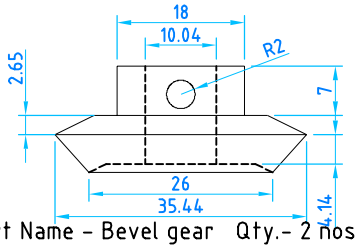

Part Name - Bevel gear Qty.- 2 nos.
Material- AISI 4140 annealed steel / AISI 1137 hot-rolled steel
Tol. - 0.01 mm

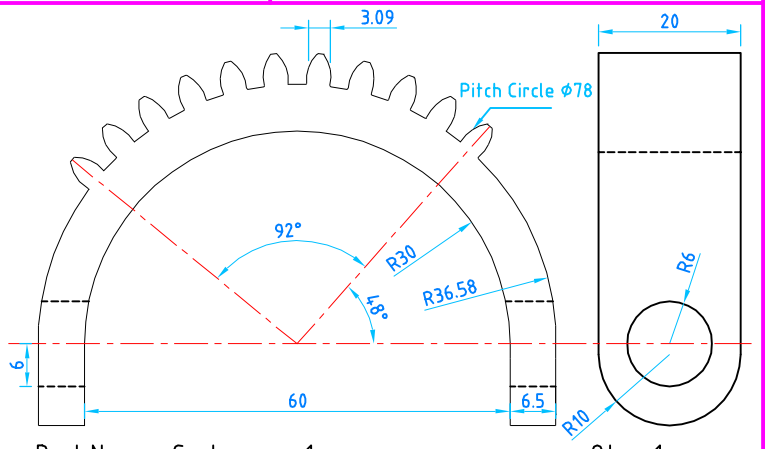

Part Name - Sector gear 1 Qty.- 1 no.
Material- AISI 4140 annealed steel / AISI 1137 hot-rolled steel
Tol. - 0.01 mm

Ankle Foot Prosthesi
Page 1 of 2